3 ARROWS ON BOTH UPPER AND LOWER CLAMPS SHOULD BE FACING TOWARDS THE FRONT OF POST

4 WIRES SHOULD BE RUN DOWN POST GROOVE, THE WIRE GUIDE SLIDES INTO THE SAME CHANNEL AND SHOULD BE SELF RETAINED

5 ORIENTATION CRITICAL

6 BALL TO BE DEFORMED INTO MOTOR FASTENER TORQUE BROACH AS ANTI-TAMPER FEATURE

7 FOLLOW 605-21-100 WORK INSTRUCTIONS FOR SPECIFIC INSTRUCTIONS ON HOW TO APPLY SEALANT TO THIS INTERFACE

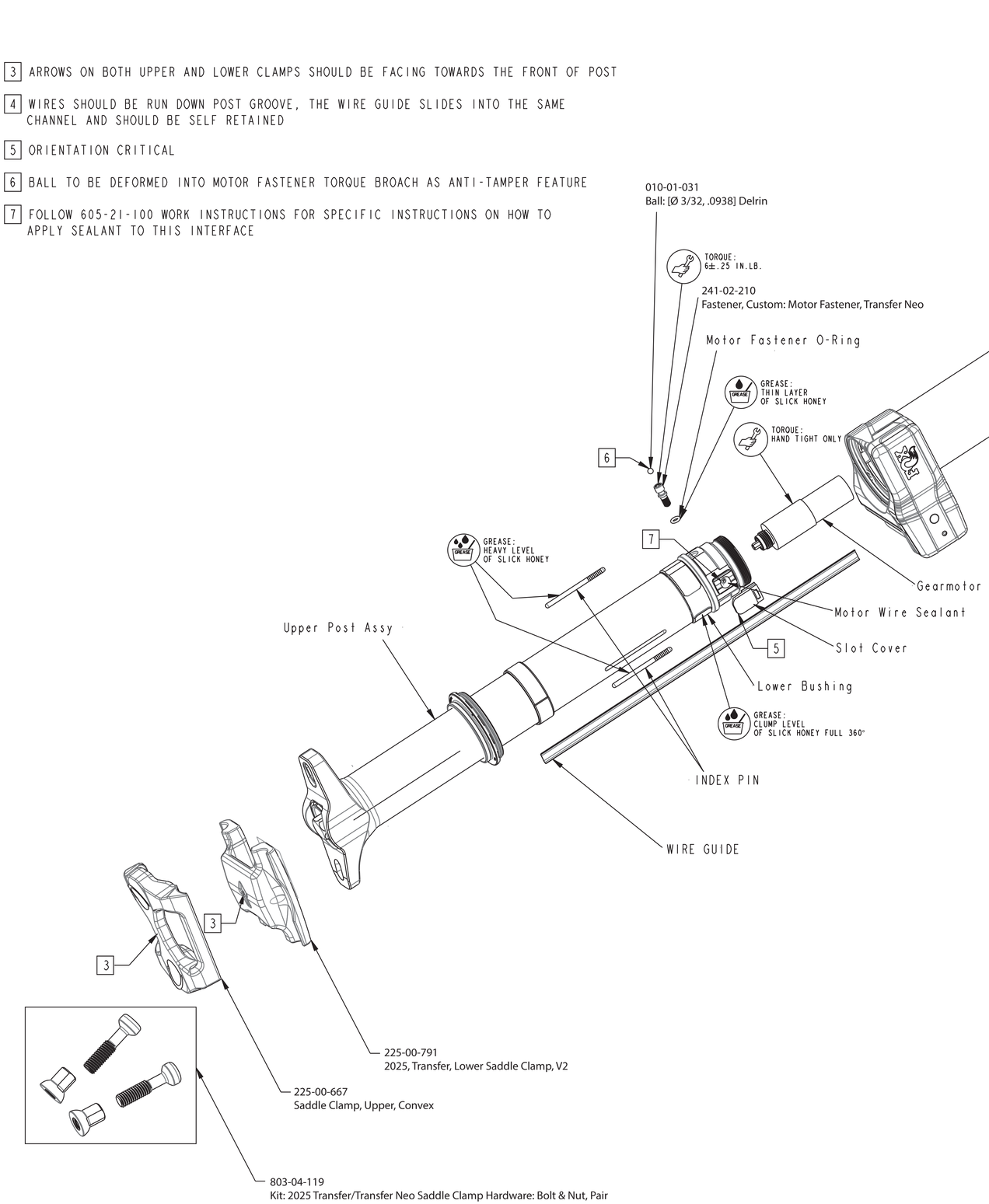

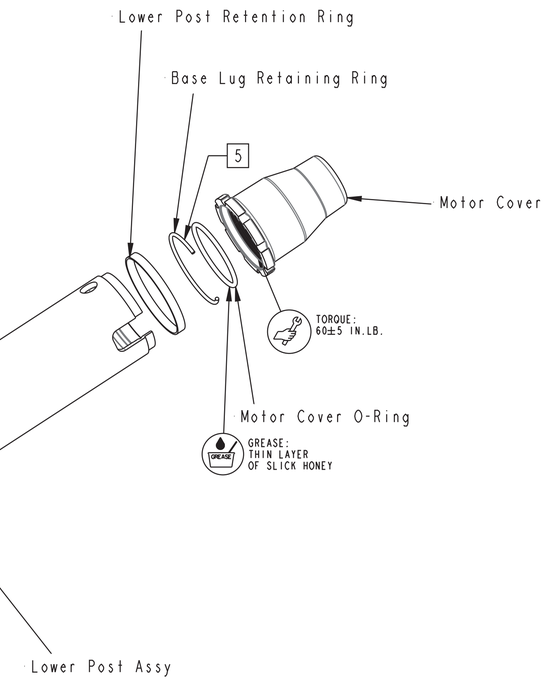

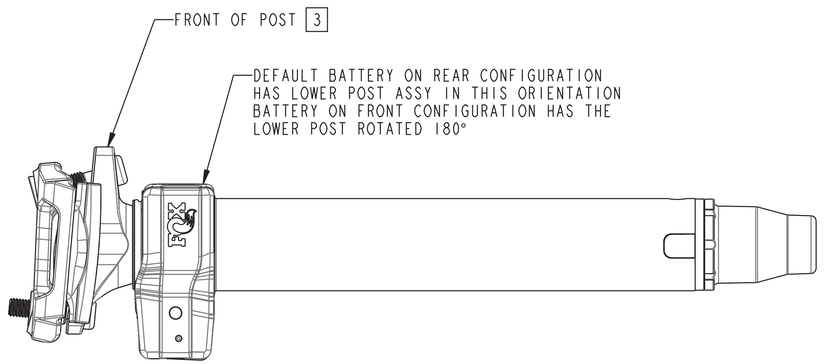

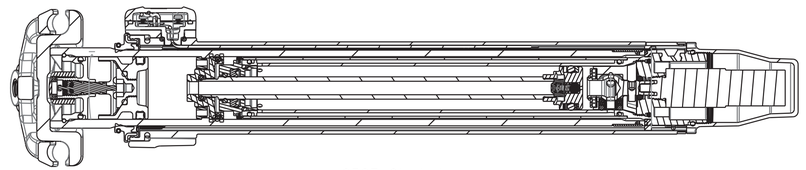

SECTION A-A

- PROPRIETARY -
THIS DOCUMENT CONTAINS CONFIDENTIAL PROPRIETARY INFORMATION THAT IS FOX PROPERTY. DO NOT DISCLOSE TO OR DUPLICATE FOR OTHERS EXCEPT AS AUTHORIZED BY FOX.

FOX Factory, Inc.
130 Hangar Way, Watsonville, CA 95076 USA
Ph 831-768-1100
Fax 831-768-9312

TITLE
2025 Transfer Neo

SIZE D | DWG. NO.

PLOT SCALE 1:1 | SHEET 1 OF 1